USER´S MANUAL
BEDIENUNGSANLEITUNG
MANUEL D`UTILISATION
MANUAL DE USUARIO
INSTRUKCJA OBSŁUGI
MANUALE D‘ USO

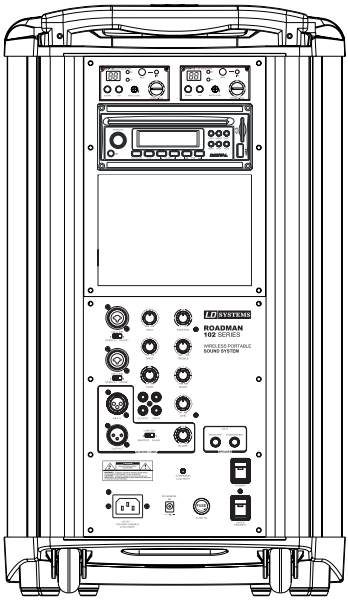

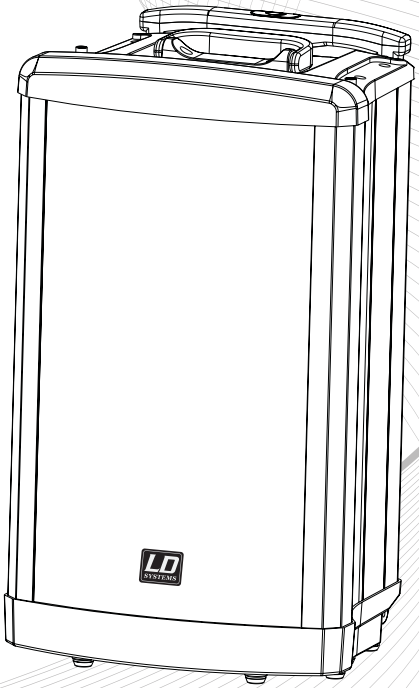

LD **ROADMAN 102**

PORTABLE SOUND SYSTEM **320 W**

You‘ve made the right choice!

We have designed this product to operate reliably over many years. LD Systems stands for this with its name and many years of experience as a manufacturer of high-quality audio products.

Please read this User‘s Manual carefully, so that you can begin making optimum use of your LD Systems product quickly.

You can find more information about LD SYSTEMS at our Internet site WWW.**LD-SYSTEMS**.COM

LD **ROADMAN 102**

MOBILE SOUND SYSTEM **320 W**

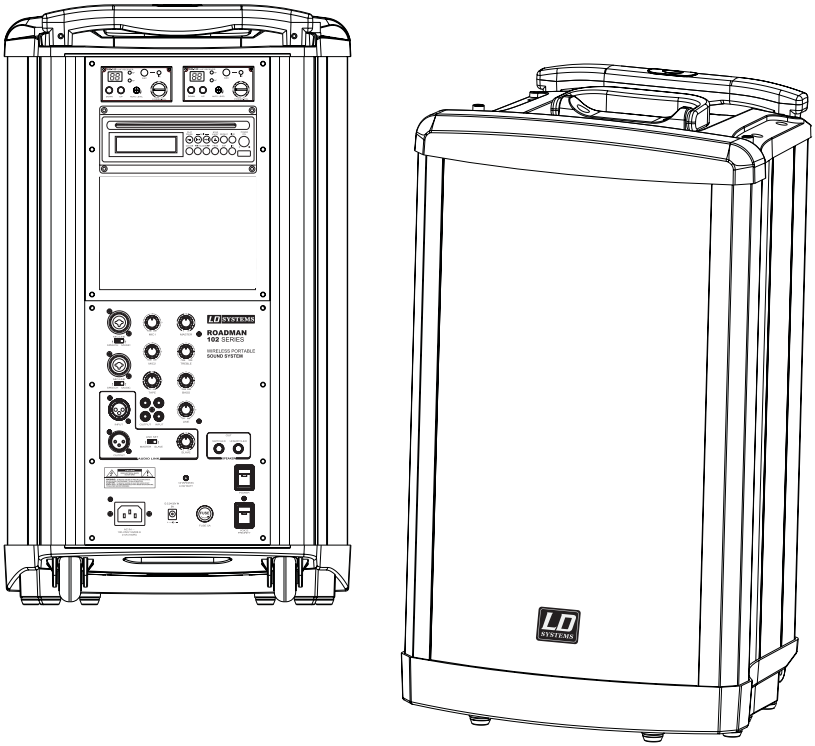

ENGLISH
DEUTSCH
FRANCAIS
ESPAÑOL
POLSKI
ITALIANO

PREVENTIVE MEASURES:

1. Please read these instructions carefully.
2. Keep all information and instructions in a safe place.
3. Follow the instructions.
4. Observe all safety warnings. Never remove safety warnings or other information from the equipment.
5. Use the equipment only in the intended manner and for the intended purpose.
6. Use only sufficiently stable and compatible stands and/or mounts (for fixed installations). Make certain that wall mounts are properly installed and secured. Make certain that the equipment is installed securely and cannot fall down.
7. During installation, observ e the applicable safety regulations for your country.
8. Never install and operate the equipment near radiators, heat registers, ovens or other sources of heat. Make certain that the equipment is always installed so that is cooled sufficiently and cannot overheat.
9. Never place sources of ignition, e.g., burning candles, on the equipment.
10. Ventilation slits must not be blocked.
11. Do not use this equipment in the immediate vicinity of water (does not apply to special outdoor equipment - in this case, observe the special instructions noted below. Do not expose this equipment to flammable materials, fluids or gases.
12. Make certain that dripping or splashed water cannot enter the equipment. Do not place containers filled with liquids, such as vases or drinking vessels, on the equipment.
13. Make certain that objects cannot fall into the device.
14. Use this equipment only with the accessories recommended and intended by the manufacturer.
15. Do not open or modify this equipment.
16. After connecting the equipment, check all cables in order to prevent damage or accidents, e.g., due to tripping hazards.
17. During transport, make certain that the equipment cannot fall down and possibly cause property damage and personal injuries.
18. If your equipment is no longer functioning properly, if fluids or objects have gotten inside the equipment or if it has been damaged in anot her way, switch it off immediately and unplug it from the mains outlet (if it is a powered device). This equipment may only be repaired by authorized, qualified personnel.
19. Clean the equipment using a dry cloth.
20. Comply with all applicable disposal laws in your country. During disposal of packaging, please separate plastic and paper/cardboard.
21. Plastic bags must be kept out of reach of children.

FOR EQUIPMENT THAT CONNECTS TO THE POWER MAINS:

22. CAUTION: If the power cord of the device is equipped with an earthing contact, then it must be connected to an outlet with a protective ground. Never deactivate the protective ground of a power cord.
23. If the equipment has been exposed to strong fluctuations in temperature (for example, after transport), do not switch it on immediately. Moisture and condensation could damage the equipment. Do not switch on the equipment until it has reached room temperature.
24. Before connecting the equipment to the power outlet, first verify that the mains voltage and frequency match the values specified on the equipment. If the equipment has a voltage selection switch, connect the equipment to the power outlet only if the equipment values and the mains power values match. If the included power cord or power adapter does not fit in your wall outlet, contact your electrician.
25. Do not step on the power cord. Make certain that the power cable does not become kinked, especially at the mains outlet and/or power adapter and the equipment connector.
26. When connecting the equipment, make certain that the power cord or power adapter is always freely accessible. Always disconnect the equipment from the power supply if the equipment is not in use or if you want

to clean the equipment. Always unplug the power cord and power adapter from the power outlet at the plug or adapter and not by pulling on the cord. Never touch the power cord and power adapter with wet hands.
27. Whenever possible, avoid switching the equipment on and off in quick succession because otherwise this can shorten the useful life of the equipment.
28. IMPORTANT INFORMATION: Replace fuses only with fuses of the same type and rating. If a fuse blows repeatedly, please contact an authorised service centre.
29. To disconnect the equipment from the power mains completely, unplug the power cord or power adapter from the power outlet.
30. If your device is equipped with a Volex power connector, the mating Volex equipment connector must be unlocked before it can be removed. However, this also means that the equipment can slide and fall down if the power cable is pulled, which can lead to personal injuries and/or other damage. For this reason, always be careful when laying cables.
31. Unplug the power cord and power adapter from the power outlet if there is a risk of a lightning strike or before extended periods of disuse.

CAUTION:
Never remove the cover, because otherwise there may be a risk of electric shock. There are no user serviceable parts inside. Have repairs carried out only by qualified service personnel.

The lightning flash with arrowhead symbol within an equilateral triangle is intended to alert the user to the presence of uninsulated “dangerous voltage” within the product’s enclosure that may be of sufficient magnitude to constitute a risk of electrical shock.

The exclamation mark within an equilateral triangle is intended to alert the user to the presence of important operating and maintenance instructions.

CAUTION – HIGH VOLUME LEVELS WITH AUDIO PRODUCTS!
This equipment is intended for professional use. Therefore, commercial use of this equipment is subject to the respectively applicable national accident prevention rules and regulations. As a manufacturer, Adam Hall is obligated to notify you formally about the existence of potential health risks.
Hearing damage due to high volume and prolonged exposure: When in use, this product is capable of producing high sound-pressure levels (SPL) that can lead to irreversible hearing damage in performers, employees, and audience members. For this reason, avoid prolonged exposure to volumes in excess of 90 dB.

CAUTION! IMPORTANT INFORMATION ABOUT LIGHTING PRODUCTS
1. Do not look into the beam from a distance of less than 40 cm.
2. Do not stare into the beam for extended periods at short-to-medium distances.
3. Do not view the beam directly with optical instruments such as magnifiers.
4. Under some circumstances, stroboscopic effects may trigger epileptic seizures in sensitive individuals! For this reason, persons who suffer from epilepsy should always avoid places where strobe lights are used.

BACK PANEL:

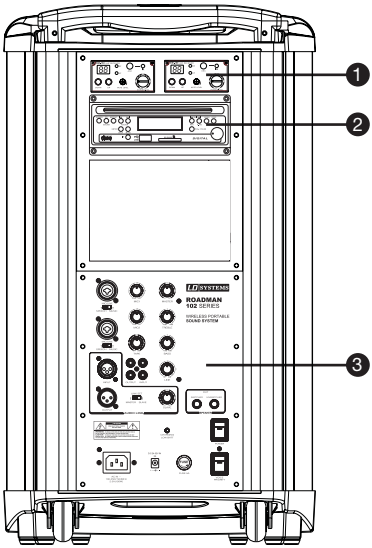

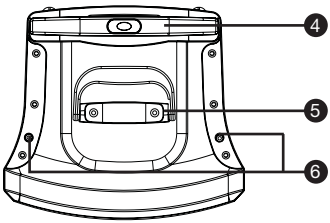

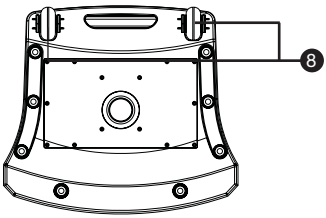

❶ **RADIO RECEIVER MODULE**
The Roadman 102 is equipped with a radio receiver. If you need to use two wireless microphones simultaneously, it is possible to install a second receiver module.

❷ **CD-PLAYER**
Digital slot-in CD-player with USB memory stick input and SD card slot. CD player with anti shock function. Supported file formats (CD-player, USB-player, SD-card reader). Audio CD, MP3, WMA.

❸ **OPERATING AREA**
Volume controls: Master, MIC 1 & 2 (wired), Line-in
EQ: Bass, Treble
Audio-Link: XLR-Input/Output (Master or Slave), RCA Input/Output
Speaker outputs: Switched and Unswitched (with and without switching)
LED Indicator: Low battery charge (red), battery charging (flashing green), battery fully charged (static green)

❹ **TROLLEY HANDLE**

❺ **HANDLE**

❻ **CONNECTOR FOR WIRELESS ANTENNA (TNC)**

❼ **TRANSPORT CASTORS**

SYSTEM COMPONENTS:

ENGLISH
DEUTSCH
FRANCAIS
ESPAÑOL
POLSKI
ITALIANO

Roadman

Handheld Microphone

Antenna

Microphone Case

Power Supply

Remote Control

similar to this image

OPTIONAL **ACCESSORIES**:

ENGLISH
DEUTSCH
FRANCAIS
ESPAÑOL
POLSKI
ITALIANO

Carrying Bag (LDRM102BAG)

Water-resistant Aerobic-Headset (LDHSAE1)

Water-resistant Headset (LDHSM1)

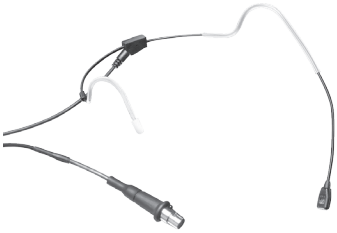

Belt Pack Transmitter (LDWS1616BP)

Headset Microphone (WS100MH3)

Additional receiver (LDRM102R)

CD-PLAYER:

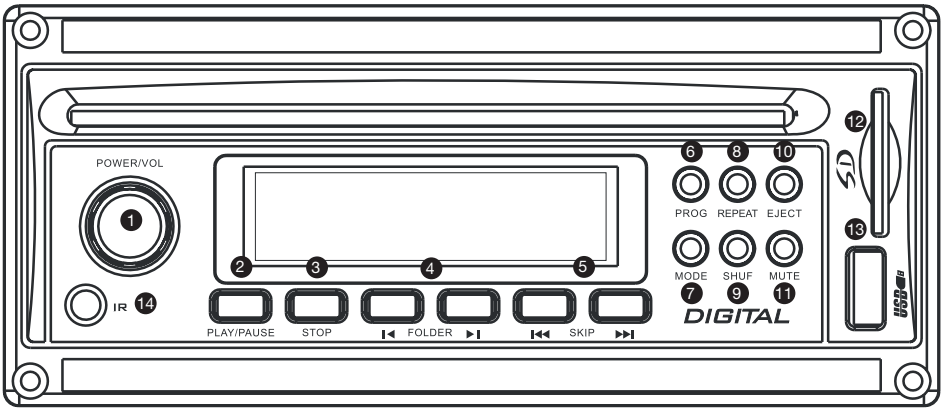

❶ **POWER/VOL**
On/Off switch, volume control
Press the button to turn on/off.

❷ **PLAY/PAUSE**

❸ **STOP**

❹ **FOLDER**
In Play mode, use the FOLDER buttons (LEFT/RIGHT) to select the first track of the previous/next folder.

❺ **SKIP (LEFT/RIGHT)**
In Play mode you can select the previous/next track using the SKIP-buttons (LEFT/RIGHT).
In Play mode, holding down the SKIP-buttons acts as Fast Forward (Fast Forward, right SKIP-button) or Fast Reverse (Fast Reverse, left SKIP-button) within a track.

❻ **PROG (PROGRAM)**
Programming your own play sequence of tracks on CD, USB memory stick and SD card.
As soon as you press the PROG button, "PROG" appears on the display above the track run-time, and the track number indicator flashes. Select the track number by using the VOLUME control for the first program item and confirm your selection with SHUF. Repeat this process to create a program. The program will be launched automatically.

❼ **MODE**
Press this button to switch between the signal source SD, USB and CD.

❽ **REPEAT**
Press button once to repeat the current track.
Press button twice to repeat all tracks.

❾ **SHUF**
Random playback

❿ **EJECT**
Eject CD

⓫ **MUTE**
Mute

⓬ **SD CARD SLOT**

⓭ **USB 2.0**
Slot for Memory Stick

⓮ **IR**
Infrared receiver for remote control

REMOTECONTROL:

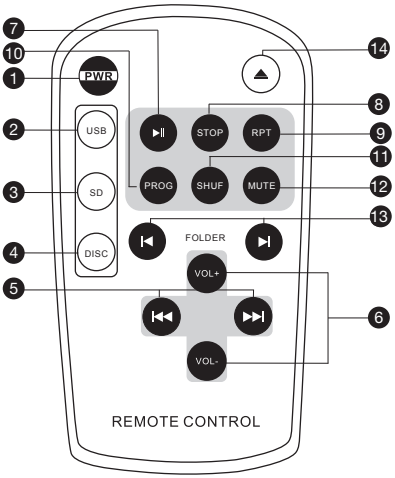

The Roadman 102 is equipped with two remote-controllable infrared receiver modules, one on the front and one on the back of the unit. This allows you to use the remote control both in front of and behind the speaker.

❶ **PWR (POWER):** On/Off switch

❷ **USB:** Select the USB interface.

❸ **SD:** Select the SD-card interface.

❹ **DISC:** Select the CD-ROM drive.

❺ **SKIP (LEFT/RIGHT):** In Play mode you can select the previous/next track using the SKIP-buttons (LEFT/RIGHT).
In Play mode, holding down the SKIP-buttons acts as Fast Forward (Fast Forward, right SKIP-button) or Fast Reverse (Fast Reverse, left SKIP-button) within a track.

❻ **VOL +/- :** Volume level. Press the Plus button (+) to increase the volume and Minus (-) to decrease it.

❼ **PLAY/PAUSE**

❽ **STOP**

❾ **RPT (REPEAT):** Press button once to repeat the current track. Press button twice to repeat all tracks.

❿ **PROG (PROGRAM)** Programming your own play sequence of tracks on CD, USB memory stick and SD card. As soon as you press the PROG button, "PROG" appears on the display above the track run-time, and the track number indicator flashes. Select the track number by using the VOLUME control for the first program item and confirm your selection with SHUF Repeat this process to create a program. The program will be launched automatically.

⓫ **SHUF (SHUFFLE):** Random playback

⓬ **MUTE:** Mute

⓭ **FOLDER:**
In Play mode, use the FOLDER buttons (LEFT/RIGHT) to select the first track of the previous/next folder.

⓮ **EJECT:** Eject CD

BACK PANEL:

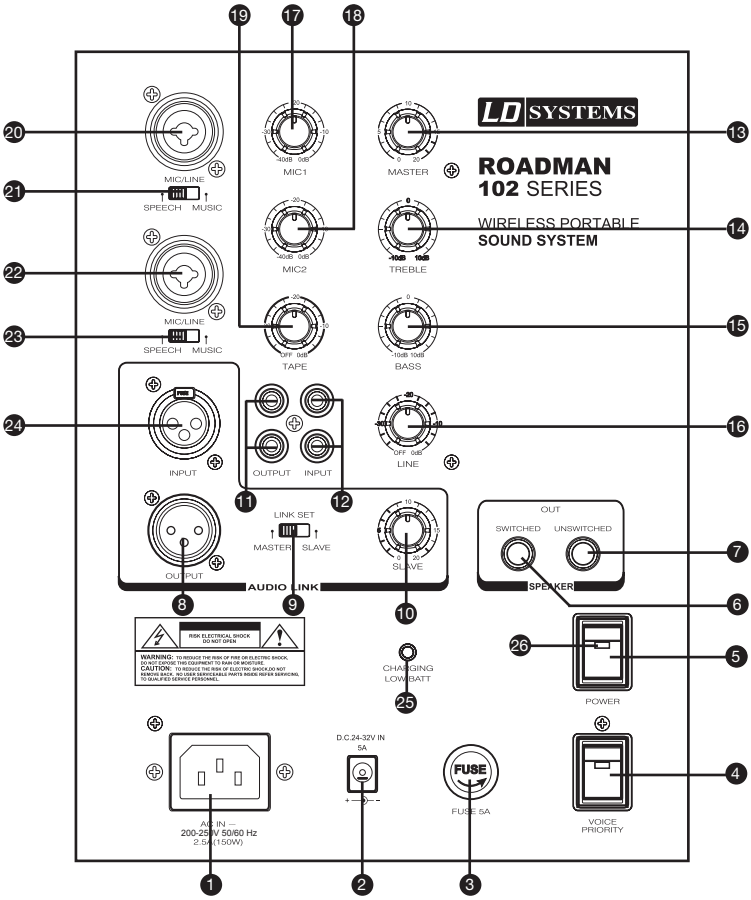

❶ **POWER SOCKET (200-250 V AC, POWER CORD)**

❷ **POWER CONNECTOR (24-32 V DC)**

❸ **FUSE (5 A)**

❹ **'VOICE PRIORITY' SWITCH**
During music playback, the "Voice Priority" function causes an automatic reduction of the volume of the music whenever the microphone is spoken into.
As soon as you stop talking, the music volume will automatically increase again. This function is also called "Talkover" (or "Ducking").

❺ **POWER SWITCH**
Main power switch (On/Off switch for the whole system)

SYSTEM SETTING AND OPERATION:

❻ **LOUDSPEAKER OUTPUT (WITH SWITCH)**
You can connect an additional passive loudspeaker in this output. When this output is used, the loudspeaker of the Roadman 102 is automatically muted and the sound is played exclusively from the passive loudspeaker (Impedance min. 4 Ω).

❼ **LOUDSPEAKER OUTPUT (WITHOUT SWITCH)**
You can connect an additional passive loudspeaker in this output. When this output is used, the sound comes from both the Roadman and the additional passive external speaker (Impedance min. 8 Ω).

❽ **LINK OUTPUT**
This output enables you to connect the Roadman with another Roadman unit.

❾ **LINK OPERATION**
MASTER/SLAVE: If you want to combine several Roadman-units with each other (between 2 and maximum 7), please observe the MASTER/SLAVE settings. The first Roadman in the "chain" must be in MASTER mode, the following units in SLAVE-mode. The MASTER Roadman then controls all other connected units (volume, On/Off etc.).

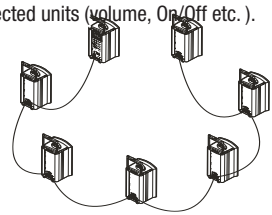

❿ **VOLUME CONTROL**
With this button, you can control the volume of the SLAVE speakers.

⓫ **RCA OUTPUTS**
To connect a recording device.

⓬ **RCA INPUTS**
To connect a playback device.

⓭ **MASTER**
Master volume control of the system

⓮ **TREBLE**
The treble tone control (treble)

⓯ **BASS**
Tone controls for the bass range (low)

⓰ **LINE**
Volume control for the Line Input (12)

⓱ **MIC 1**
Volume control for microphone 1 (Input 20)

⓲ **MIC 2**
Volume control for microphone 2 (Input 22)

⓳ **TAPE**
No function

⓴ **MIC/LINE**
Microphone/Line Input 1 (XLR/Jack combo Jack)

㉑ **SPEECH/MUSIC**
SPEECH = MIC: Microphone level signals
MUSIC = LINE: Line-level signals

㉒ **MIC/LINE**
Microphone/Line Input 2 (XLR/Jack combo Jack)

㉓ **SPEECH/MUSIC**
SPEECH = MIC: Microphone level signals
MUSIC = LINE: Line-level signals

㉔ **LINK**
This output enables you to connect the Roadman with another Roadman unit. Connect the LINK input of the SLAVE Roadman with the LINK output of the MASTER Roadman.

㉕ **CHARGING/LOW BATT**
LED Indicator: Low battery charge (red), battery charging (flashing green), battery fully charged (static green)

㉖ **POWER LED**
Lights up red when the system is in operation (turned on).

RADIO **RECEIVER** MODULE:

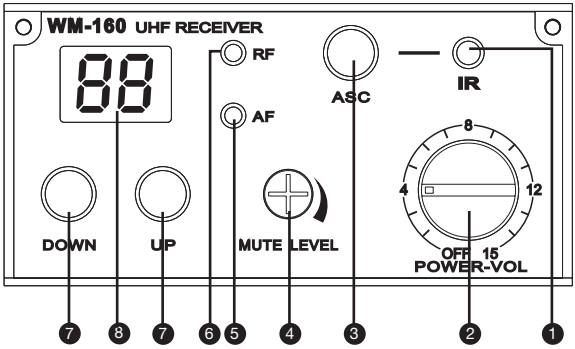

❶ **IR WINDOW**
Sends infrared signals to the transmitter for frequency synchronisation.

❷ **POWER**
On/Off switch and volume control.

❸ **ASC**
Select the frequency for the transmission on the receiver and then press the ASC-button to synchronise transmitter and receiver. Align the IR window (infrared interface) of the microphone with the IR window of the receiver. (Synchronisation with Belt Pack Transmitter: Press the "ASC" button on the transmitter and the receiver in order to enable the synchronisation.)

❹ **MUTE LEVEL**
Squelch setting on the receiver:
The squelch function is used for noise reduction, if the transmitter is turned off or the receiver does not receive a sufficiently strong signal from the transmitter.
The squelch value (mute level) of the receiver is already correctly adjusted at the factory. Normally, no further adjustment is required.
However, should a readjustment be necessary, set the squelch value to a level that does not generate any noise in the receiver when the transmitter is switched off.

❺ **AF LED**
Indicates whether or not the module receives an audio signal.

❻ **RF LED**
Indicates whether or not the module receives a radio frequency signal (RF signal).

❼ **UP/DOWN**
Select channel 1 - 16

❽ **LED DISPLAY**
Channel number display

HANDHELD TRANSMITTER:

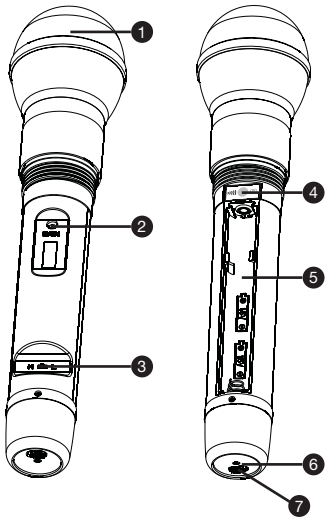

❶ **MICROPHONE HEAD GRILL**

❷ **GAIN**
This button controls the sensitivity of the microphone (rotation to the left reduces the sensitivity, rotation to the right increases it).
The sensitivity is factory set to the optimum level (for most applications).

❸ **RF SWITCH (RADIO SIGNAL)**
"H" stands for "High" (strong signal), "L" for "Low" (weak signal).

❹ **IR INTERFACE**

❺ **BATTERY COMPARTMENT**
Please insert 2 "AA" alkaline batteries (LR6, 1.5 V).

❻ **POWER/ASC**
LED is static green: the microphone is switched on
LED flashes green: the infrared transmission is active
LED flashes red: Low Battery

❼ **ON/OFF SWITCH**

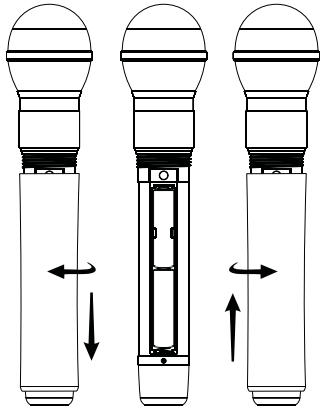

REPLACING THE BATTERIES
If the battery LED light flashes, please replace the batteries immediately.

BELT PACK TRANSMITTER:

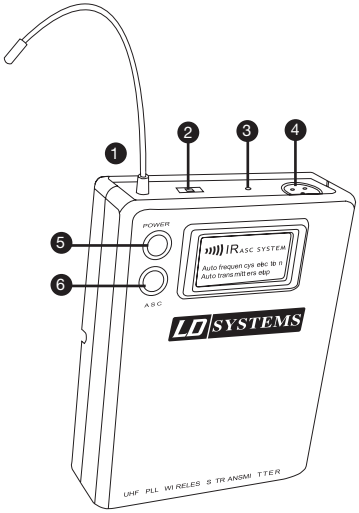

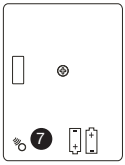

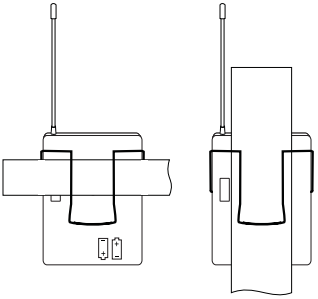

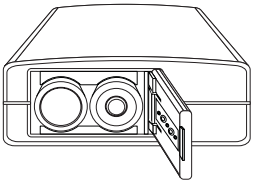

❶ **ANTENNA**

❷ **GAIN SETTING**
Mic: Microphone
0: guitar with passive pickups
-10 dB: guitar with active pickups

❸ **POWER-LED**
Green: Operating
Red: Low Battery
Flashing red: the infrared transmission is active

❹ **MICROPHONE INPUT (MINI XLR)**

❺ **POWER BUTTON (ON/OFF)**

❻ **ASC BUTTON (ACTIVATE SYNC)**
Frequency synchronisation via infrared

❼ **IR INTERFACE**

HOW TO ATTACH THE BELT PACK TRANSMITTER
Attach the transmitter to a belt or strap. To ensure a secure grip, slide the clip of the transmitter as far down as possible on the belt or strap.
Guitarists have the option to slide the guitar strap directly through the clip.

REPLACING THE BATTERIES
If the battery status indicator is flashing red, you should replace the batteries immediately (see figure on the left). Please insert 2 "AA" alkaline batteries (LR6, 1.5 V).

BATTERY **MULATOR**:

Before you install the Roadman 102 for the first time, the batteries should be charged for 12 hours.
When the battery charge status is low, the corresponding LED lights up red. During the charging process the LED flashes green.
If you want to charge the batteries, you only need to plug the power cord of the appliance into a power socket.
The Roadman 102 is equipped with two batteries (12 V).

Recharge the battery fully at every opportunity. Never completely discharge a rechargeable lead battery or store it in discharged or semi-charged condition. During extended periods of disuse and storage, the battery must be recharged fully at regular intervals.

HOW TO REPLACE THE BATTERIES

1. Make sure that the device is turned off and not connected to the mains power supply.
2. Unscrew the bottom cover of the Roadman.
3. Remove the old batteries and insert the new ones. Be sure to pay attention to the correct polarity (red = + // black = -).
4. Insert the new batteries and screw the cover back on.
5. Charge the new batteries for at least 12 hours.

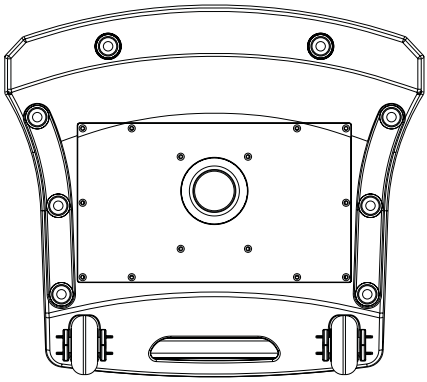

THE BATTERY IS LOCATED IN THE BOTTOM OF THE ROADMAN

SPECIFICATIONS:

BASIC SPECIFICATIONS MAIN UNIT

Output power (max.): 320 W
Frequency response: 70 Hz - 16 kHz
Maximum sound pressure: 115 dB
Speaker: 10“ Woofer / 1“ Tweeter
Power: 200 V - 250 V Switching power supply
Charge battery: 12 V / 5 Ah (2 pieces)
Size (W x H x D): 355 x 610x 315 mm
Weight: 19 kg
Receiver module: UHF Module (863 - 865 MHz)
(art. LDRM102R)

CD PLAYER

Product type:
Compact disc digital audio system with mechanic & electronic anti-shock CD, CD-R, MP3, WMA, USB, SD, MP3, WMA available.
Disc loading: Slot-in Type
Supply voltage: DC 12 V (10 ~ 16 V)
Power consumption: Within 5 W
Dimensions (W x H x D): 160 x 147,4 x 68,5 mm
Weight: 1.2 kg

RECEIVER

Channels: 16
Carrier frequency range: 863 - 865 MHz
Audio bandwidth: 60 Hz - 16 kHz
THD: <1%
Signal/noise ratio: > 100 dB
Modulation: FM
Dimensions: 73 x 36 x 120 mm
Net weight: 100 g
Power requirements: 12 V DC

HANDHELD TRANSMITTER

Channels: 16
Carrier frequency range: 863 - 865 MHz
Capsule type: Dynamic
Polar pattern: Cardioid
RF Output power: 10 mW
Audio bandwidth: 60 Hz - 16 kHz
Signal/noise ratio: > 102 dB
Modulation: FM
Dimensions: 235 x 54 mm
Net weight: 280 g
Power requirements: 2 x "AA" batteries
Battery Life: >10 hours

BELT PACK TRANSMITTER

Channels: 16
Carrier frequency range: 863 - 865 MHz
RF Output power: 10 mW
Max. input level: 6 mV
Audio bandwidth: 60 Hz - 16 kHz
Signal/noise ratio: > 102 dB
Modulation: FM
Dimensions: 85 x 65 x 24 mm
Net weight: 80 g
Power requirements: 2 x "AA" batteries
Battery Life: >10 hours, depending on batteries

SPECIFICATIONS:

LDWS1616 / Roadman / Roadboy
For Intermodulation frequency list, free use of up to three wireless microphones simultaneously.

Nr.	Frequency MHz	Simultaneous
1	863,100	X
2	863,900	
3	864,500	
4	864,900	
5	863,200	
6	863,300	
7	863,400	
8	863,500	
9	863,600	
10	863,700	X
11	863,800	
12	864,000	
13	864,100	X
14	864,200	
15	864,300	
16	864,400	

MANUFACTURER´S DECLARATIONS:

MANUFACTURER‘S WARRANTY

This warranty covers the Adam Hall, LD Systems, Defender, Palmer, and Cameo brands.
It applies to all products distributed by Adam Hall.
This warranty declaration does not affect the statutory warranty claims against the manufacturer, but expands them with additional warranty claims vis-a-vis Adam Hall.

Adam Hall warrants that the Adam Hall product that you have purchased from Adam Hall or from an Adam Hall authorized reseller is free from defects in materials or workmanship under normal use for a period of 2 or 5 years (please inquire on a product-by-product basis) from the date of purchase.

The warranty period begins on the date on which the product was purchased, proof of which must be produced (through presentation of the invoice or the delivery note with the date of purchase) in the event of a warranty claim. Should products of the brands named above be in need of repair within the limited warranty period, you are entitled to warranty service according to the terms and conditions stated here.

During the Limited Warranty Period, Adam Hall will repair or replace the defective component parts or the product. In the event of repair or replacement during the Limited Warranty Period, the replaced original parts and/or products become property of Adam Hall.

In the unlikely event that the product which you purchased has a recurring failure, Adam Hall has the right, at its discretion, to replace the defective product with another product, provided that the new product is at least equivalent to the product being replaced with regard to the technical specifications.

Adam Hall does not warrant that the operation of this product will be uninterrupted or error-free. Adam Hall is not responsible for damage that occurs as a result of your failure to follow the instructions included with the Adam Hall branded product. The manufacturer‘s warranty does not cover – expendable parts (e. g., rechargeable batteries)
- products from which the serial number has been removed or with a serial number that has been damaged as a result of an accident - damage due to improper use, user error or other external reasons
- damage to devices operated outside the usage parameters stated in the documentation included with the product
- damage due to the use of replacement parts not manufactured, sold or recommended by Adam Hall,
- damage due to modification or servicing by anyone other than Adam Hall.

These terms and conditions constitute the complete and exclusive warranty agreement between you and Adam Hall regarding the Adam Hall branded product you have purchased.

MANUFACTURER´S DECLARATIONS:

LIMITATION OF LIABILITY

If your Adam Hall branded hardware product fails to work as warranted above, your sole and exclusive remedy shall be repair or replacement. Adam Halls' maximum liability under this limited warranty is expressly limited to the lesser of the price you have paid for the product or the cost of repair or replacement of any components that malfunction under conditions of normal use.

Adam Hall is not liable for any damages caused by the product or the failure of the product, including any lost profits or savings or special, incidental, or consequential damages. Adam Hall is not liable for any claim made by a third party or made by you for a third party.

This limitation of liability applies whether damages are sought, or claims are made, under this Limited Warranty or as a tort claim (including negligence and strict product liability), a contract claim, or any other claim, and cannot be rescinded or changed by anyone. This limitation of liability will be effective even if you have advised Adam Hall or an authorized representative of Adam Hall of the possibility of any such damages, but not, however, in the event of claims for damages in connection with personal injuries.

This manufacturer‘s warranty grants you specific rights; depending on jurisdiction (nation or state), you may be be entitled to additional claims. You are advised to consult applicable state or national laws for a full determination of your rights.

REQUESTING WARRANTY SERVICE

To request warranty service for the product, contact Adam Hall or the Adam Hall authorized reseller from which you purchased the product.

EC DECLARATION OF CONFORMITY

The equipment marketed by Adam Hall complies (where applicable) with the essential requirements and other relevant specifications of Directives 1999/5/EC (R&TTE), 2004/108/EC (EMC) und 2006/95/EC (LVD). Additional information can be found at www.adamhall.com.

MANUFACTURER´S DECLARATIONS:

PROPER DISPOSAL OF THIS PRODUCT

(Valid in the European Union and other European countries with waste separation)

This symbol on the product, or the documents accompanying the product, indicates that this appliance may not be treated as household waste. This is to avoid environmental damage or personal injury due to uncontrolled waste disposal. Please dispose of this product separately from other waste and have it recycled to promote sustainable economic activity.

Household users should contact either the retailer where they purchased this product, or their local government office, for details on where and how they can recycle this item in an environmentally friendly manner.
Business users should contact their supplier and check the terms and conditions of the purchase contract. This product should not be mixed with other commercial wastes for disposal .

ENVIRONMENTAL PROTECTION AND ENERGY CONSERVATION

Energy conservation is an active contribution to environmental protection. Please turn off all unneeded electrical devices. To prevent unneeded devices from consuming power in standby mode, disconnect the mains plug.

Adam Hall GmbH, all rights reserved. The technical data and the functional product characteristics can be subject to modifications. The photocopying, the translation, and all other forms of copying of fragments or of the integrlity of this user's manual is prohibited.

WWW.**LD-SYSTEMS**.COM

Adam Hall GmbH | Daimlerstrasse 9 | 61267 Neu-Anspach | Germany
Tel. +49(0)6081/9419-0 | Fax +49(0)6081/9419-1000
web : www.adamhall.com | e-mail : mail@adamhall.com

RoHS